<< Inductive sensor

Ring Sensor

Description:

Pulse stretching adjustable

Sensitivity adjustable

Short response time

Technical data:

Ring diameter	6,1mm
Resolution	φ0,2mm(copper wire)
Supply voltage U	10~35V DC polarity protection
Switching output	PNP, NO/NC switchable
Output current	200mA
Power consumption (without load)	<11mA
Voltage drop	2.0V
Mounting distance to metal	>5mm
Droptime	<0,5ms/<10ms
Pulse stretching	10~150ms/adjustable
Ambient temperature	-25.+70°C
Insulation voltage endurance	1000V
Enclosure rating	IP 67 according to EN60529
Housing material	Plastic
Connection	M12

Dimensions:

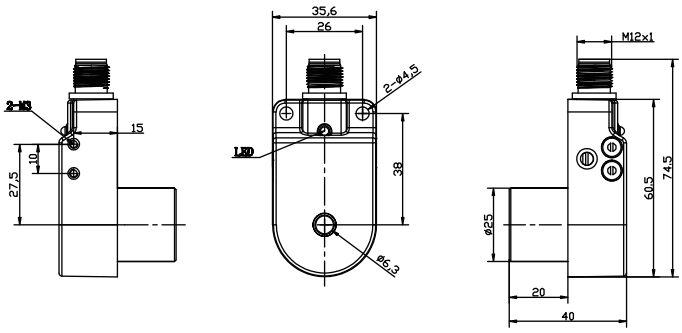

Connection configurations:

PNP,NO/NC